0500-3363 was exported on: Apr 14 2003 and is an Un-Controlled Document

0500_3363	D	Pro/ENGINEER	METRIC DWG

REL NO	LTR	NO	REVISION	ZONE	DR	CHKR	APPROVED	DATE
FRD14502	A	1	PRODUCTION_RELEASE	-	DAO	DAO	MET	11-14-02

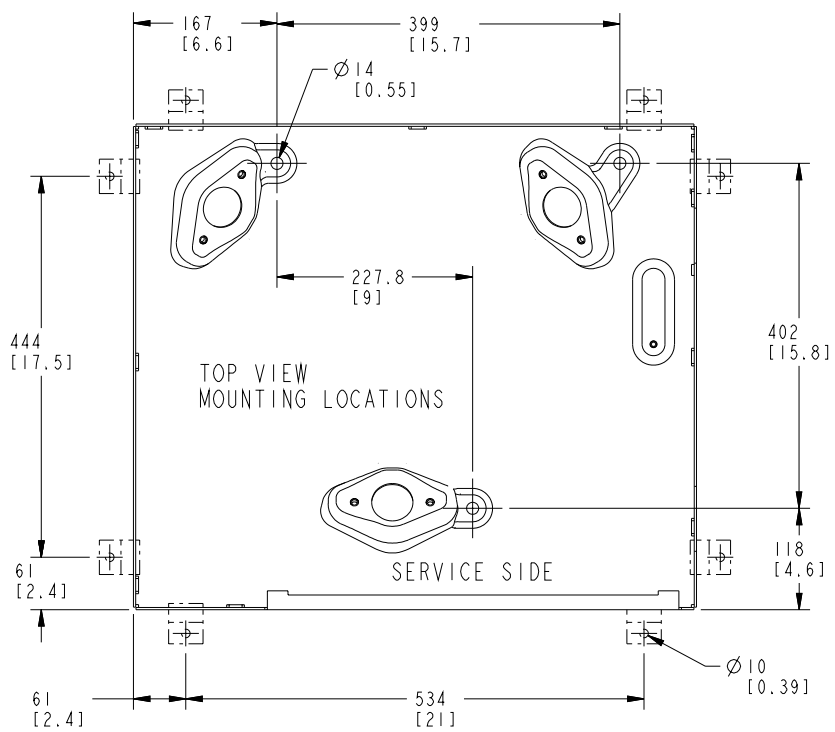

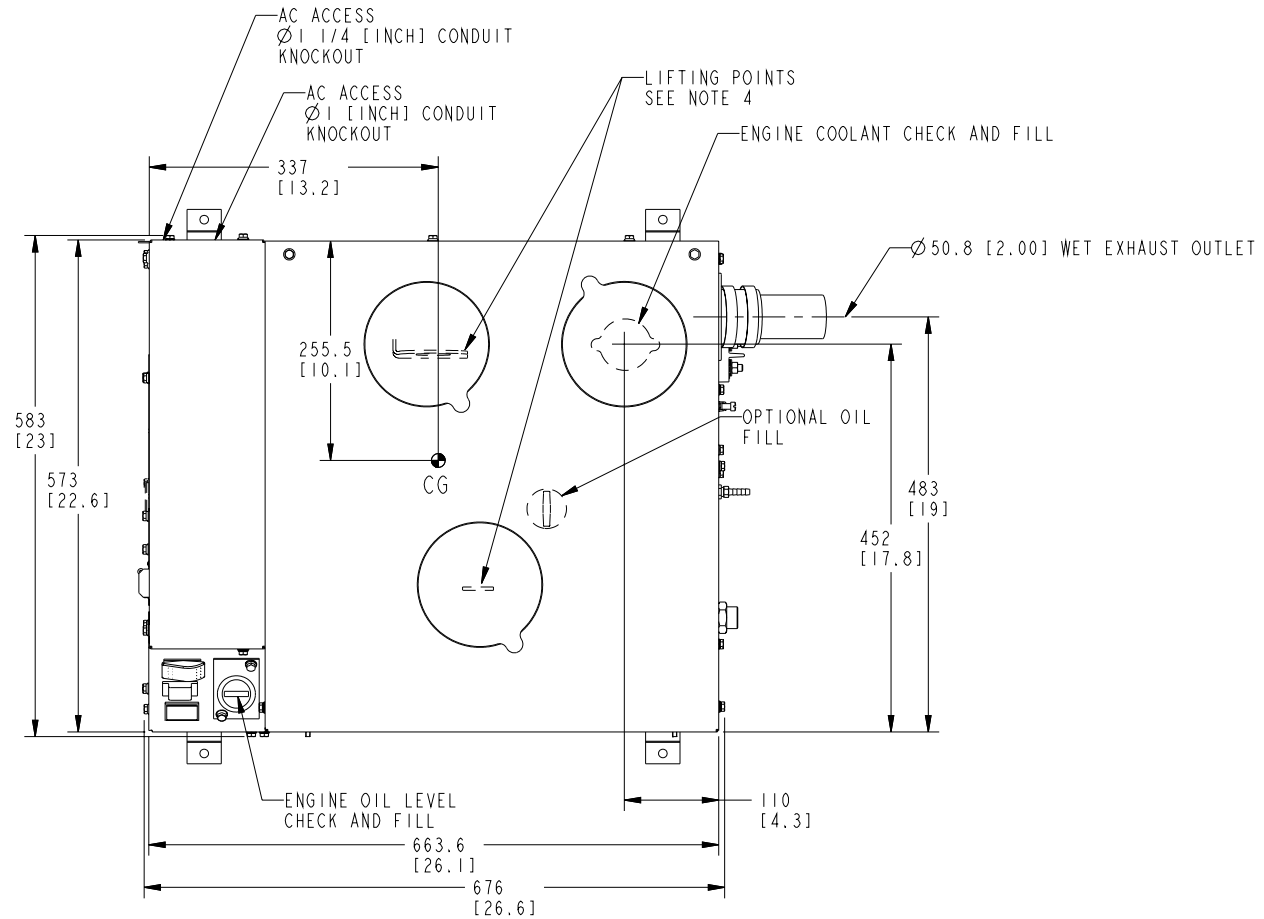

NOTES:

1. DIMENSIONS IN [ ] ARE IN INCHES
2. 25.4 [1.00] MINIMUM CLEARANCE REQUIRED FOR AIRFLOW AT AIR INLET AND OUTLET
3. 4 TABS (ONE AT EACH CORNER) MINIMUM REQUIRED WHEN USING EXTERNAL MOUNTING TABS
4. TWO POINT LIFT IS REQUIRED
5. UNIT WEIGHT:
   DRY: 193 kg (425 lb)
   WET: 197 kg (435 lb)

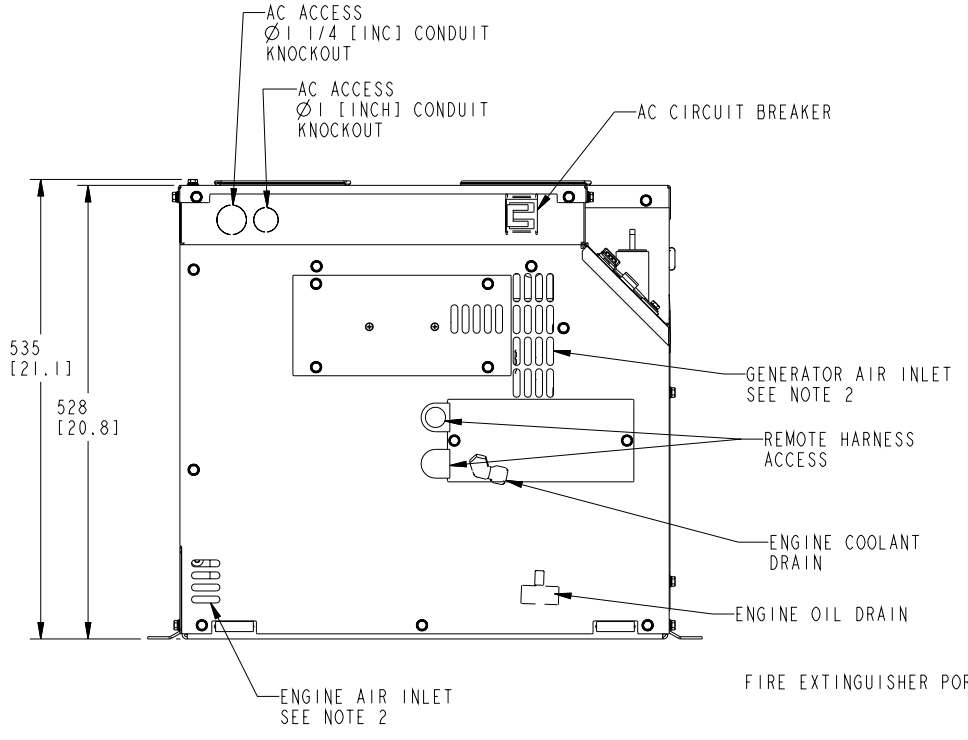

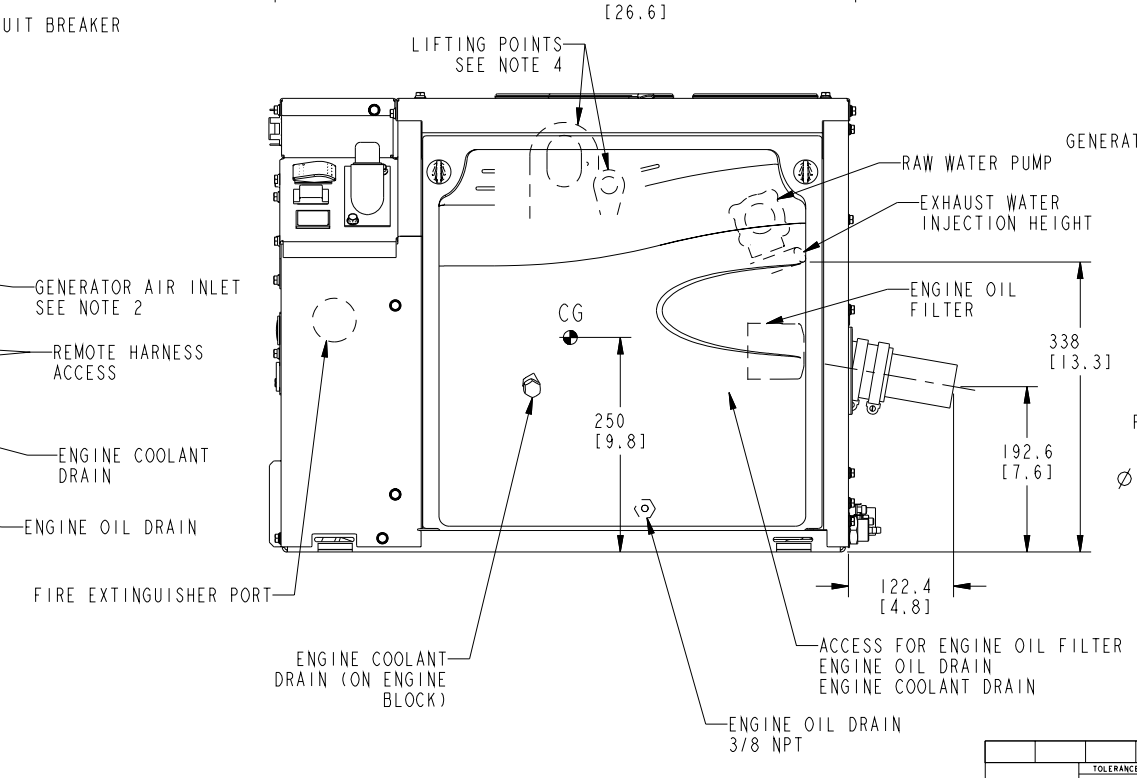

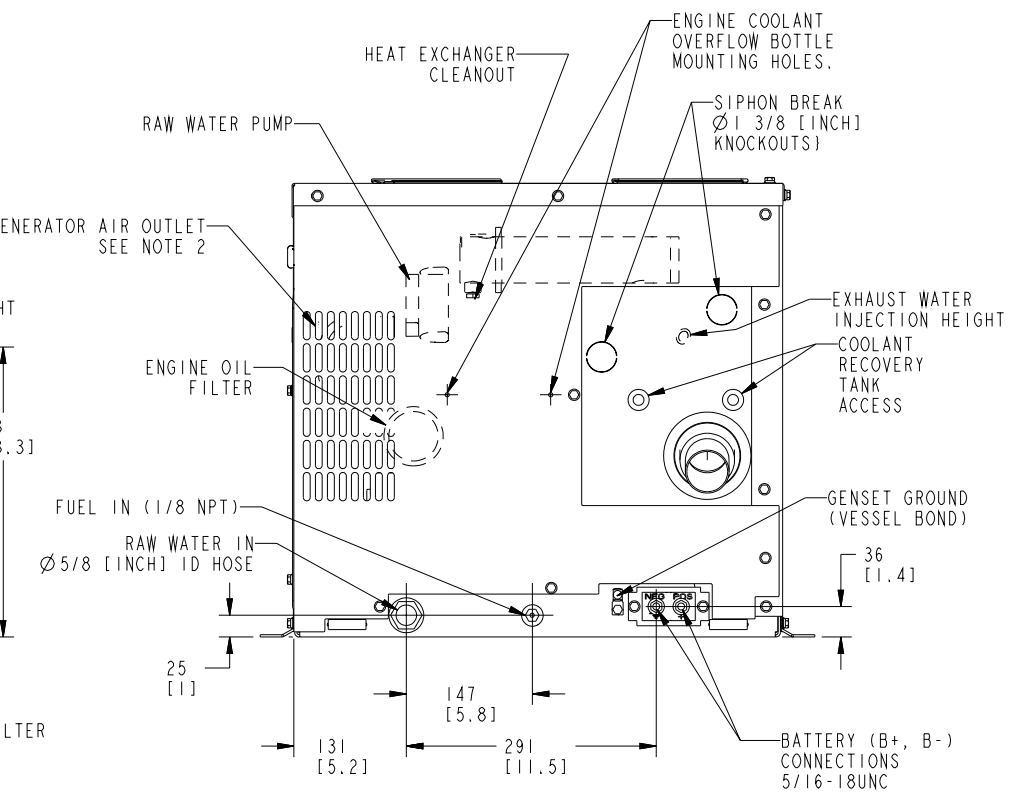

DO NOT SCALE PRINT	TOLERANCE UNLESS OTHERWISE SPECIFIED	mm		inch		SW TO .	QTY	ITEM	PART NO	DWG SIZE	DESCRIPTION OR MATERIAL	REF DES
	DIM	X ±		.X ±		COPIED FROM .						
		.X ±		.XX ±		THIRD ANGLE PROJECTION						
		.XX ±		.XXX ±								
ANG TOL ± 1.0°	TOL	0.00-4.99	±0.15/-0.08	.000-.200	+.006/-.003	THIS DOCUMENT IS THE PROPERTY OF CUMMINS POWER GENERATION. IT CONTAINS PROPRIETARY AND CONFIDENTIAL INFORMATION WHICH MUST NOT BE DUPLICATED, USED OR DISCLOSED, EXCEPT WHEN EXPRESSLY AUTHORIZED BY CUMMINS POWER GENERATION OR ITS REPRESENTATIVE						
DRAWN TO SCALE OF 1/4		5.00-9.99	±0.20/-0.10	.201-.421	+.008/-.004							
		10.00-17.49	±0.25/-0.13	.422-.703	+.010/-.005							
		17.50-24.99	±0.30/-0.13	.704-.999	+.012/-.005							

	NAME	DATE
DR	G.SALMONSON	12-04-00
CHKR / MFG	M.TURPIN	02-07-02
APPROVED	M.TURPIN	02-07-02

FOR INTERPRETATION OF DIMENSIONING AND TOLERANCING, SEE ANSI Y14.5M-1982

MODEL FIRST USED ON MGKBC

SITE CODE PGA

CUMMINS POWER GENERATION
1400 73RD AVE NE
MINNEAPOLIS, MINNESOTA 55432

TITLE ENG/GEN_OUTLINE .

DWG NO 0500_3363 | SHEET 1 of 1 | DWG SIZE D